PROCESS SERIES

CLASS 150 & 300 SD, DD, LD, LB SERIES

CL150 CL300	10”

SINGLE DISC (“SD” SERIES)

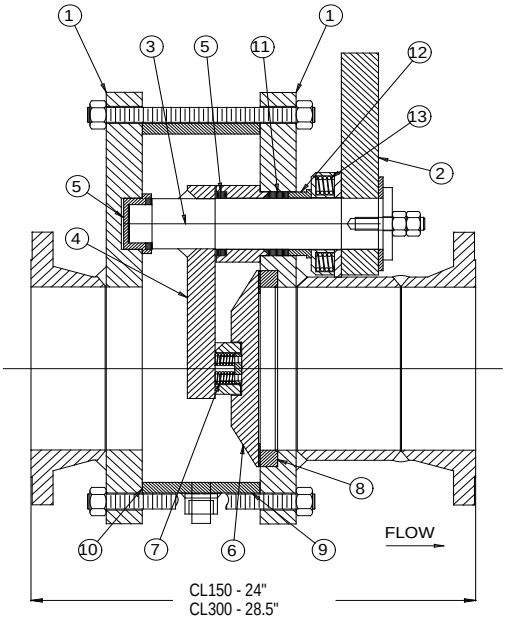

SPECIFICATIONS	
Rating:	CL150 & CL300 ANSI B16.34
Temp. Range:	-20°F TO 750°F
Ends:	RF Flanged
Body:	Carbon Steel & 316 Stainless Steel
Seats & Disc:	Stellite #6 Overlay
Configuration:	SD (Single Disc) shown at left
	DD (Double Disc) bottom left
	LD (Lens Disc) bottom center
	LB (Lock Bar) bottom right
Operators:	Air Cylinder; Handwheel
Accessories:	Limit Switches; Solenoid; Fail Safe (Air Reservoir & Solenoid). Refer to Standard Accessory Sheets for accessory specifications.
Est. Cv:	3300

Notes:

1) All valves are supplied with (1) 1”NPT Purge/Drain connection. (Shown in dotted lines on drawings)

NO.	NAME	DESCRIPTION (C.S. BODY)	DESCRIPTION (S.S. BODY)
1	Body Plates	Carbon Steel A516 Gr. 70	Stainless Steel A240 Gr. 316
2	Wrench	Carbon Steel	Carbon Steel
3	Post	17-4 PH Stainless Steel	17-4 PH Stainless Steel
4	Lever Arm	Carbon Steel A516 Gr.70	Stainless Steel A240 Gr.316
5	Bearings	Semi – Steel	Nitronic 60
6	Disc	Carbon Steel / Stellite #6 Overlay	Stainless Steel / Stellite #6 Overlay
7	Spring	Carbon Steel A516 Gr. 70	Stainless Steel A240 Gr.316
8	Seat	Carbon Steel / Stellite #6	Stainless Steel / Stellite #6
9	Spacer Ring	Carbon Steel A516 Gr. 70	Stainless Steel A240 Gr.316
10	Gaskets	Corrugated 304 Stainless Steel	Corrugated 304 Stainless Steel
11	Packing	See “Packing Options” Sheet	See “Packing Options” Sheet
12	Gland	Nitronic 60	Nitronic 60
13	Gland Springs	17-7 PH Stainless Steel	17-7 PH Stainless Steel
14	Lens Disc	Carbon Steel	316 Stainless Steel
15	Lock Bar	Stellite #6 Faced Carbon Steel	Stellite #6 Faced Stainless Steel

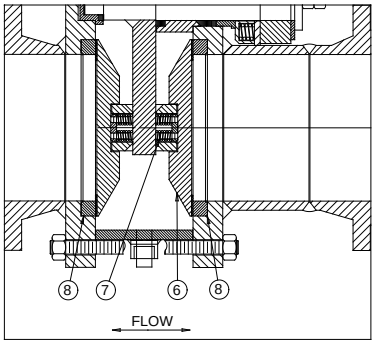

DOUBLE DISC (“DD” SERIES)

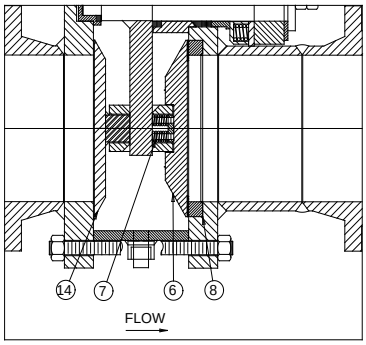

LENS DISC (“LD” SERIES)

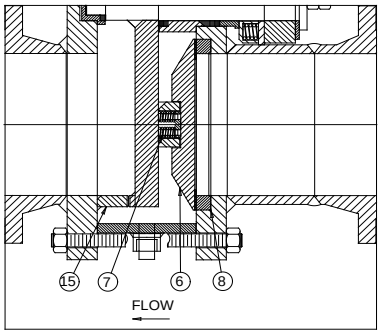

LOCK BAR (“LB” SERIES)

Everlasting VALVE COMPANY, INC.
108 SOMOGYI COURT
S. PLAINFIELD N.J. 07080
TEL: (908) 769-0700 **FAX**: (908) 769-8697
WEB: WWW.EVERLASTINGVALVECO.COM

ISO 9001 CERTIFIED!

VMA

PROCESS SERIES

CLASS 150 & 300 SD, DD, LD, LB SERIES

CL150
CL300

10”

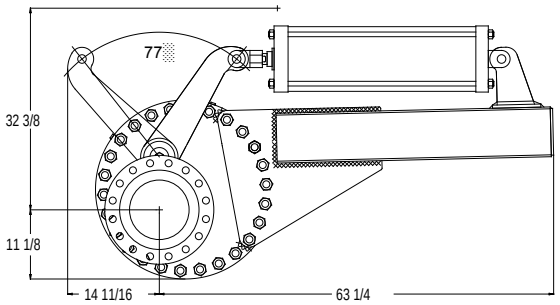

AIR CYLINDER OPERATOR

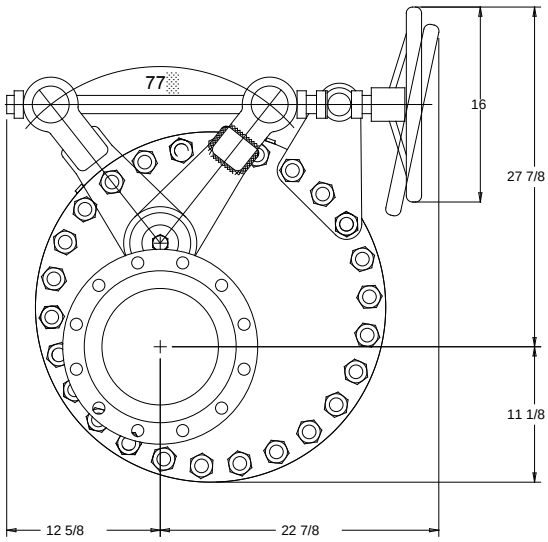

HANDWHEEL OPERATOR

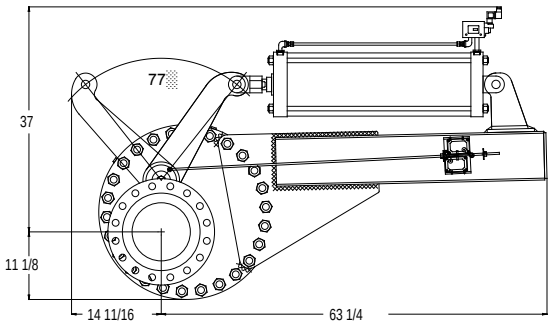

A/C WITH LIMIT SWITCHES & SOLENOID

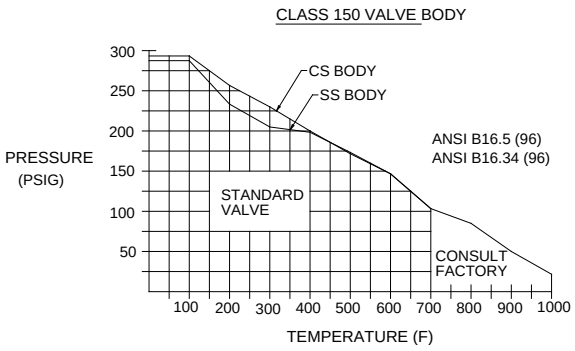

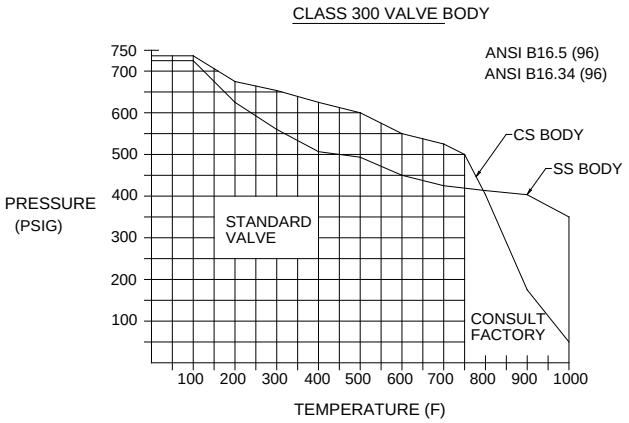

MAXIMUM DIFFERENTIAL PRESSURE DURING VALVE CYCLING FOR CL150 & CL300 (4)

FLUID	CYL @ 60 PSI AIR	CYL @ 80 PSI AIR	CYL @ 100 PSI AIR	HANDWHEEL
CLEAN FLUID	125	170	215	500
20% SLURRY (1)	75	120	165	355
50% SLURRY (1)	60	105	150	310
75% SLURRY (1)	50	95	140	260
100% SLURRY	25	70	115	200

NOTES:

1. For vertically positioned valves in slurry service, use 100% slurry value. For solid columns, Consult factory.
2. All air cylinder values in table include a Safety Factor of 1.5.
3. Gear, hydraulic or electric operators can be sized per customer specs as applicable – Consult factory
4. Consult Everlasting for higher differential pressures or for any clarifications.

Everlasting VALVE COMPANY, INC.
108 SOMOGYI COURT
S. PLAINFIELD N.J. 07080
TEL: (908) 769-0700 **FAX**: (908) 769-8697
WEB: WWW.EVERLASTINGVALVECO.COM

ISO 9001 CERTIFIED!

Everlasting VALVE COMPANY, INC.

108 SOMOGYI COURT
S. PLAINFIELD N.J. 07080
TEL: (908) 769-0700 **FAX**: (908) 769-8697
WEB: WWW.EVERLASTINGVALVECO.COM

ISO 9001 CERTIFIED!

VMA