HIGH TEMP PROCESS SERIES

CLASS 150 & 300 SD, DD, LD SERIES

CL150 CL300	2”

SINGLE DISC (“SD” SERIES)

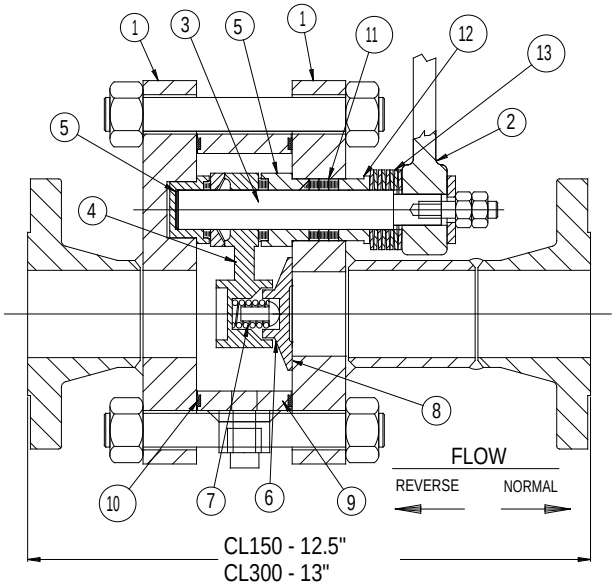

SPECIFICATIONS	
Rating:	CL150 & CL300 Per ANSI B16.34
Temp. Range:	Per ANSI B16.34
Ends:	Per ANSI B16.34
Body:	Consult Factory for Options
Seats & Disc:	Nickel Chrome Carbide
Configuration:	SD (Single Disc) shown at left
	DD (Double Disc) bottom left
	LD (Lens Disc) bottom center
Operators:	Air Cylinder; Lever; Handwheel
Accessories:	Limit Switches; Solenoid; Fail Safe (Air Reservoir & Solenoid). Refer to Standard Accessory Sheets for Accessory Specifications.
Est. Cv:	132

Notes:
1) All valves are supplied with (1) 1/2”NPT Purge/Drain connection. (Shown in dotted lines on drawings)

NO.	NAME	DESCRIPTION
1	Body Plates	Consult Factory for Options
2	Wrench	Carbon Steel
3	Post	Consult Factory for Options
4	Lever Arm	Consult Factory for Options
5	Bearings	Nitronic 60
6	Disc	Nickel Chrome Carbide Jetkote
7	Spring	Inconel X-750
8	Seat	Nickel Chrome Carbide Jetkote
9	Spacer Ring	Consult Factory for Options
10	Gaskets	Flexitallic – Non-ASB
11	Packing	See “Packing Options” Sheet
12	Gland	Nitronic 60
13	Gland Springs	Inconel X-750
14	Lens Disc	Consult Factory for Options

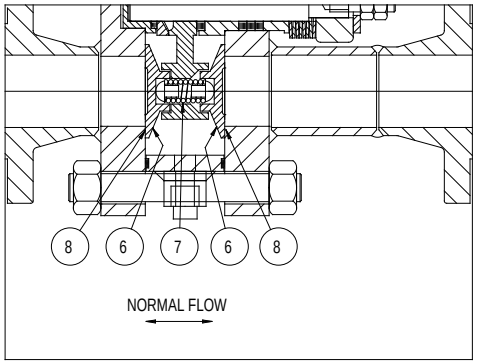

DOUBLE DISC (“DD” SERIES)

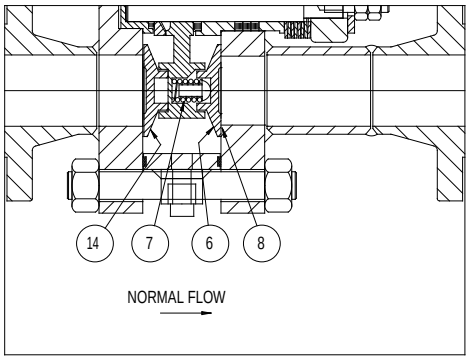

LENS DISC (“LD” SERIES)

Everlasting VALVE COMPANY, INC.
108 SOMOGYI COURT
S. PLAINFIELD N.J. 07080
TEL: (908) 769-0700 **FAX**: (908) 769-8697
WEB: WWW.EVERLASTINGVALVEUSA.COM

ISO 9001 CERTIFIED!

VMA

HIGH TEMP PROCESS SERIES

CLASS 150 & 300 SD, DD, LD SERIES

CL150 CL300	2”

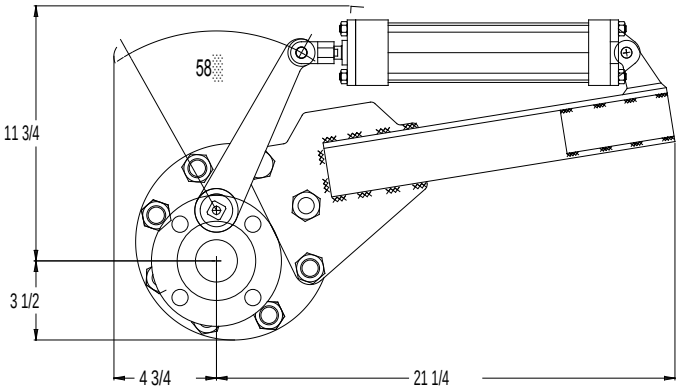

AIR CYLINDER OPERATOR

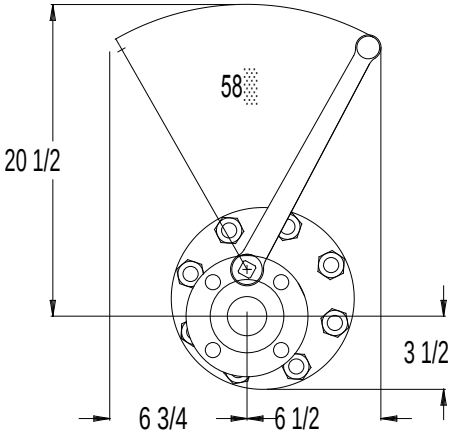

LEVER OPERATOR

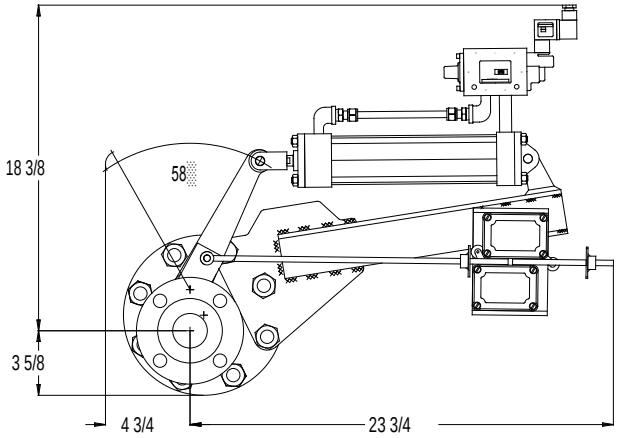

A/C WITH LIMIT SWITCHES & SOLENOID

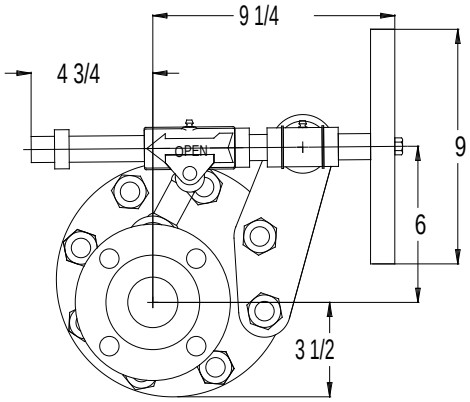

HANDWHEEL OPERATOR

MAXIMUM DIFFERENTIAL PRESSURE DURING VALVE CYCLING FOR CL150 & CL300 (4)

FLUID	CYL @ 60 PSI AIR	CYL @ 80 PSI AIR	CYL @ 100 PSI AIR	LEVER	HANDWHEEL
CLEAN FLUID	220	310	400	200	600
20% SLURRY (1)	170	260	350	150	550
50% SLURRY (1)	155	245	335	135	535
75% SLURRY (1)	140	230	320	120	520
100% SLURRY	120	210	300	100	500

NOTES:
1. For vertically positioned valves in slurry service, use 100% slurry value. For solid columns, Consult factory.
2. All air cylinder values in table include a Safety Factor of 1.5.
3. Gear, hydraulic or electric operators can be sized per customer specs as applicable – Consult factory
4. Consult Everlasting for higher differential pressures or for any clarifications.

Everlasting VALVE COMPANY, INC.

108 SOMOGYI COURT
S. PLAINFIELD N.J. 07080
TEL: (908) 769-0700 **FAX**: (908) 769-8697
WEB: WWW.EVERLASTINGVALVEUSA.COM

ISO 9001 CERTIFIED!