CLASS 150 & 300 SD, DD, LD SERIES

CL150 / CL300 — 1"

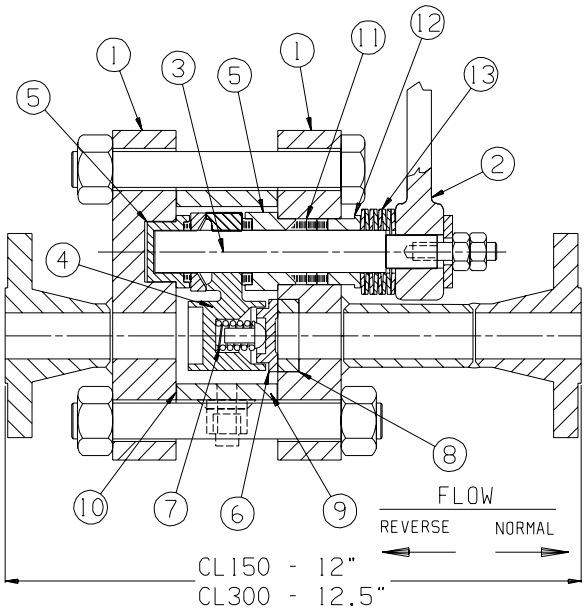

SINGLE DISC ("SD" SERIES)

SPECIFICATIONS

Rating:	CL150 & CL300 ANSI B16.34
Temp. Range:	-20 F to 750 F
Ends:	RF Flanged
Body:	Carbon Steel & 316 Stainless Steel
Seats & Discs:	Cast Stellite #6
Configurations:	SD (Single Disc) shown at left DD (Double Disc) bottom left LD (Lens Disc) bottom right
Operators:	Lever; Handwheel; Air Cylinder
Accessories:	Limit Switches; Solenoid; Fail Safe (Air Reservoir & Solenoid). Refer to Standard Accessory Sheets for accessory specifications.
Est. Cv :	40

Notes:

1) All valves are supplied with (1) 3/8" Purge/Drain connection. (Shown in dotted lines on drawings)

NO.	NAME	DESCRIPTION (C.S. BODY)	DESCRIPTION (S.S. BODY)
1	Body Plates	Carbon Steel A516 Gr. 70	Stainless Steel A240 Gr. 316 w/Stell. #6
2	Wrench	Carbon Steel	Carbon Steel
3	Post	17-4 PH Stainless Steel	17-4 PH Stainless Steel
4	Lever Arm	Cast 17-4 PH Stainless Steel	Cast 17-4 PH Stainless Steel
5	Bearings	Semi - Steel	Nitronic 60
6	Disc	Cast Stellite #6	Cast Stellite #6
7	Spring	17-7 PH Stainless Steel	17-7 PH Stainless Steel
8	Seat	Cast Stellite #6	Cast Stellite #6
9	Spacer Ring	Carbon Steel A106 Gr. C	Stainless Steel A312 TP316
10	Gaskets	Corrugated 304 Stainless Steel	Corrugated 304 Stainless Steel
11	Packing	See "Packing Options" Sheet	See "Packing Options" Sheet
12	Gland	Nitronic 60	Nitronic 60
13	Gland Springs	17-7 PH Stainless Steel	17-7 PH Stainless Steel
14	Lens Disc	Cast Stellite #6	Cast Stellite #6

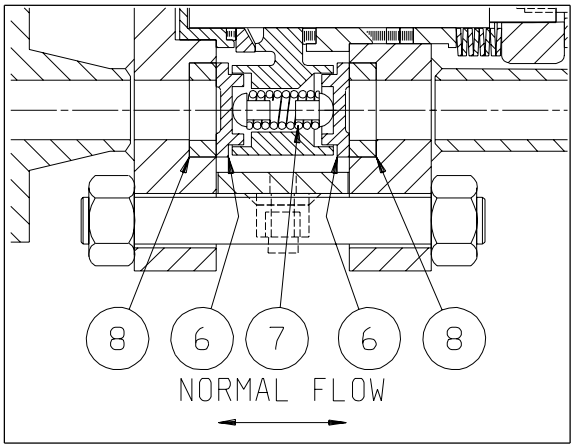

DOUBLE DISC ("DD" SERIES)

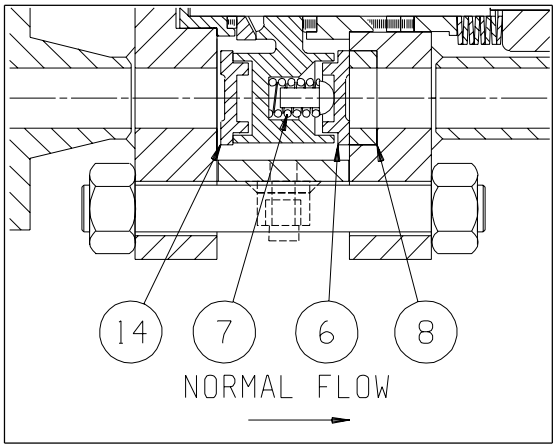

LENS DISC ("LD" SERIES)

EVERLASTING VALVE COMPANY, INC
108 SOMOGYI CT., S. PLAINFIELD N.J. 07080
TEL: 908-769-0700 FAX: 908-769-8697
Member VMA

CL150 CL300 1"

CLASS 150 & 300 SD, DD, LD SERIES

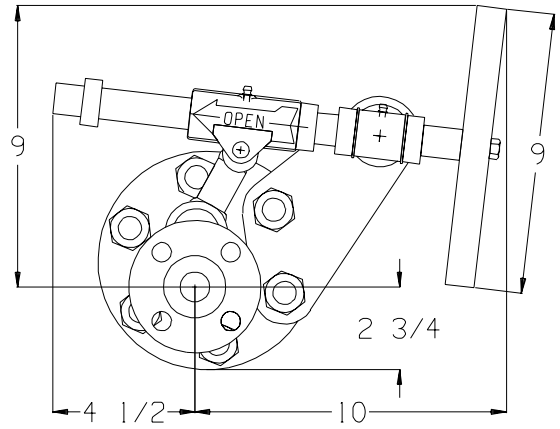

HANDWHEEL OPERATOR

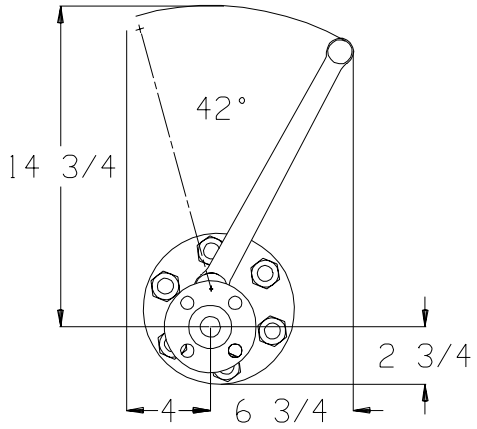

LEVER OPERATOR

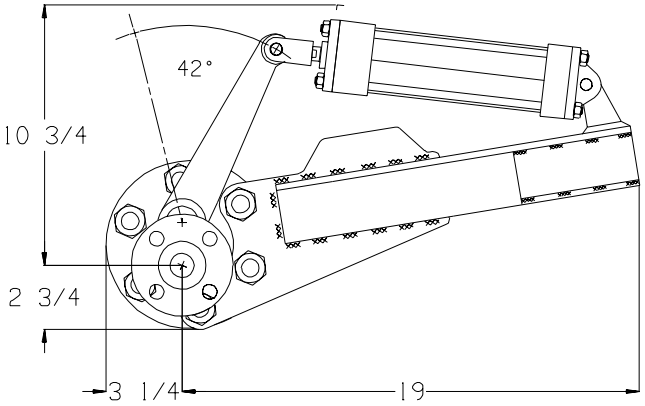

AIR CYLINDER OPERATOR

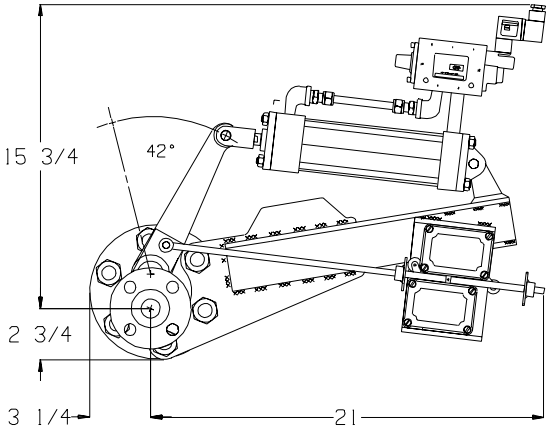

A/C W/ LIMIT SWITCHES & SOLENOID

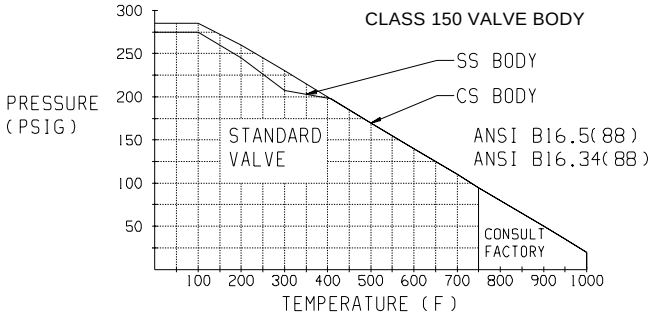

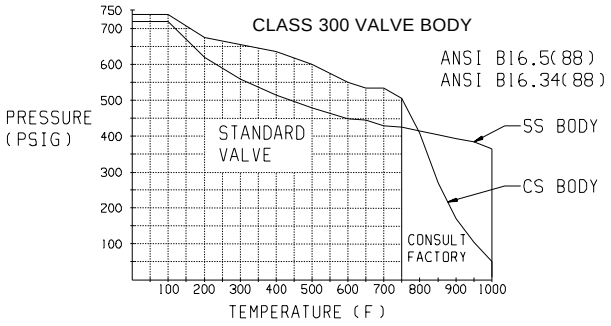

MAXIMUM DIFFERENTIAL PRESSURE DURING VALVE CYCLING FOR CL150 & CL300 (4)

FLUID	CYL @ 60 PSI AIR	CYL @ 80 PSI AIR	CYL @ 100 PSI AIR	WRENCH	HANDWHEEL
CLEAN FLUID	FULL RATING	FULL RATING	FULL RATING	275	FULL RATING
20% SLURRY(1)	FULL RATING	FULL RATING	FULL RATING	200	FULL RATING
50% SLURRY(1)	FULL RATING	FULL RATING	FULL RATING	180	FULL RATING
75% SLURRY(1)	FULL RATING	FULL RATING	FULL RATING	160	715
100% SLURRY	FULL RATING	FULL RATING	FULL RATING	135	690

NOTES:
1. For vertically positioned valves in slurry service, use 100% slurry value. For solid columns, Consult factory.
2. All air cylinder values in Table include a Safety Factor of 1.5.
3. Gear, hydraulic or electric operators can be sized per customer specs as applicable - consult factory.
4. Consult Everlasting for higher differential pressures or for any clarifications.

EVERLASTING VALVE COMPANY, INC
108 SOMOGYI CT., S. PLAINFIELD N.J. 07080
TEL: 908-769-0700 FAX: 908-769-8697