CLASS 150 & 300 SD, DD, LD, LB SERIES

CL150 / CL300 — 6"

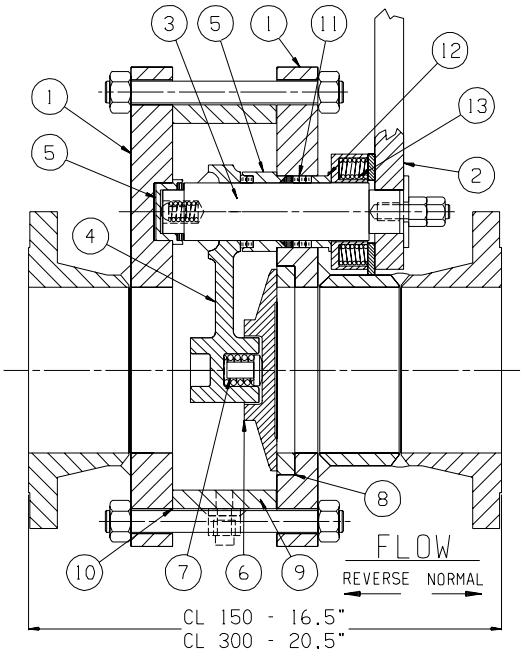

SINGLE DISC ("SD" SERIES)

SPECIFICATIONS

Rating:	CL150 & CL300 ANSI B16.34
Temp. Range:	-20 F to 750 F
Ends:	RF Flanged
Body:	Carbon Steel & 316 Stainless Steel
Seats & Discs:	Cast Stellite #6
Configurations:	SD (Single Disc) shown at left DD (Double Disc) bottom left LD (Lens Disc) bottom center LB (Lock Bar) bottom right
Operators:	Lever; Handwheel; Air Cylinder
Accessories:	Limit Switches; Solenoid; Fail Safe (Air Reservoir & Solenoid). Refer to Standard Accessory Sheets for accessory specifications.
Est. Cv :	1248

Notes:

1) All valves are supplied with (1) 1/2" Purge/Drain connection. (Shown in dotted lines on drawings)

NO.	NAME	DESCRIPTION (C.S. BODY)	DESCRIPTION (S.S. BODY)
1	Body Plates	Carbon Steel A516 Gr. 70	Stainless Steel A240 Gr. 316 w/ Stell. #6
2	Wrench	Carbon Steel	Carbon Steel
3	Post	17-4 PH Stainless Steel	17-4 PH Stainless Steel
4	Lever Arm	Cast 17-4 PH Stainless Steel	Cast 17-4 PH Stainless Steel
5	Bearings	Semi - Steel	Nitronic 60
6	Disc	Cast Stellite #6	Cast Stellite #6
7	Springs	17-7 PH Stainless Steel	17-7 PH Stainless Steel
8	Seat	Cast Stellite #6	Cast Stellite #6
9	Spacer Ring	Carbon Steel A106 Gr. C	Stainless Steel A312 TP316
10	Gaskets	Corrugated 304 Stainless Steel	Corrugated 304 Stainless Steel
11	Packing	See "Packing Options" Sheet	See "Packing Options" Sheet
12	Gland	Nitronic 60	Nitronic 60
13	Gland Springs	17-7 PH Stainless Steel	17-7 PH Stainless Steel
14	Lens Disc	Cast Stellite #6	Cast Stellite #6
15	Lock Bar	Stellite #6 Faced Carbon Steel	Stellite #6 Faced Stainless Steel

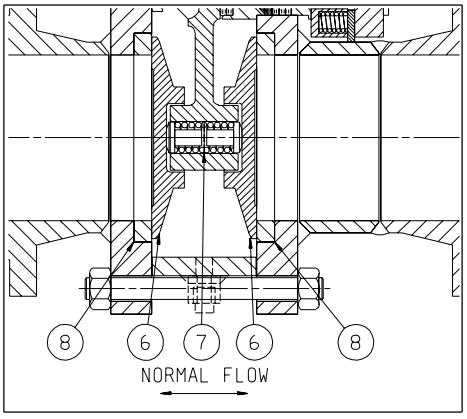

DOUBLE DISC ("DD" SERIES)

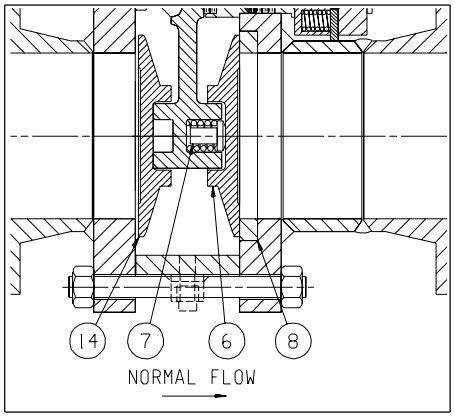

LENS DISC ("LD" SERIES)

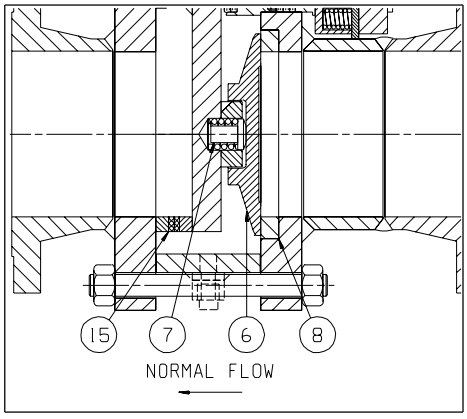

LOCK BAR ("LB" SERIES)

EVERLASTING VALVE COMPANY, INC
108 SOMOGYI CT., S. PLAINFIELD N.J. 07080
TEL: 908-769-0700 FAX: 908-769-8697
Member VMA

CL150
CL300 **6"**

CLASS 150 & 300 SD, DD, LD, LB SERIES

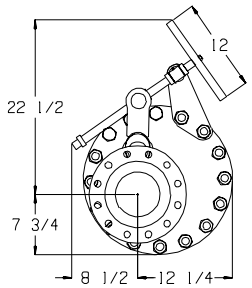

HANDWHEEL OPERATOR

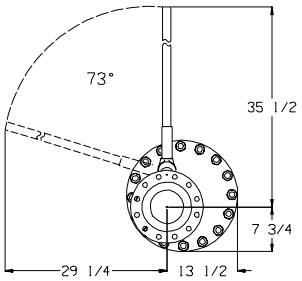

LEVER OPERATOR

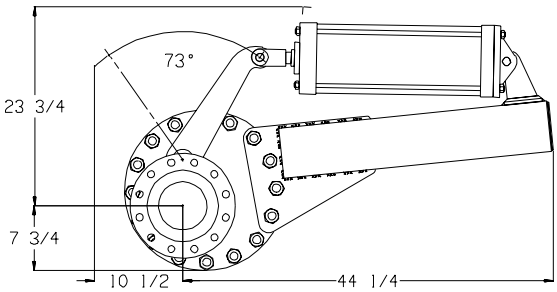

AIR CYLINDER OPERATOR

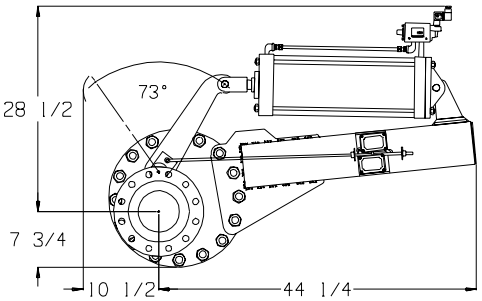

A/C WITH LIMIT SWITCHES & SOLENOID

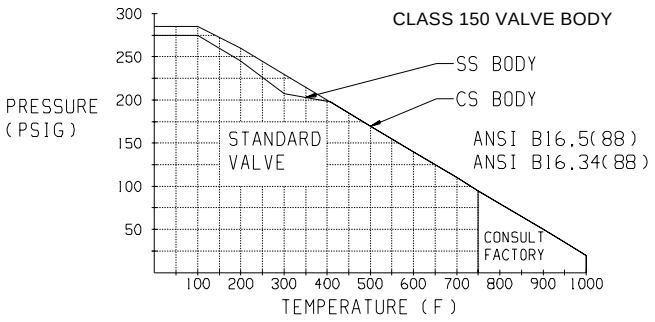

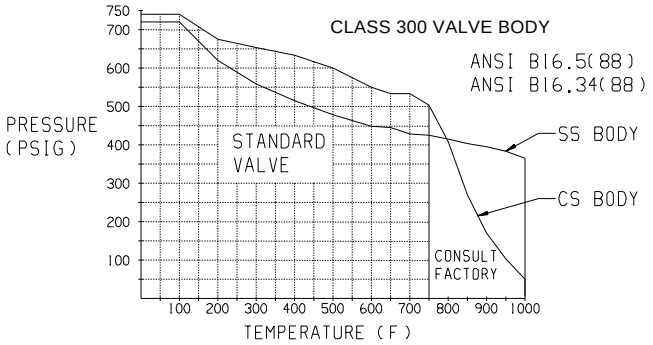

MAXIMUM DIFFERENTIAL PRESSURE DURING VALVE CYCLING FOR CL150 (4)

FLUID	CYL @ 60 PSI AIR	CYL @ 80 PSI AIR	CYL @ 100 PSI AIR	WRENCH	HANDWHEEL
CLEAN FLUID	135	180	230	70	500
20% SLURRY(1)	85	130	180	20	355
50% SLURRY(1)	70	115	165	5	310
75% SLURRY(1)	55	100	150	NR	260
100% SLURRY	35	80	130	NR	200

MAXIMUM DIFFERENTIAL PRESSURE DURING VALVE CYCLING FOR CL300 (4)

FLUID	CYL @ 60 PSI AIR	CYL @ 80 PSI AIR	CYL @ 100 PSI AIR	WRENCH	HANDWHEEL
CLEAN FLUID	245	330	415	70	500
20% SLURRY(1)	195	280	365	20	355
50% SLURRY(1)	180	265	350	5	310
75% SLURRY(1)	165	250	335	NR	260
100% SLURRY	145	230	315	NR	200

NOTES:
1. For vertically positioned valves in slurry service, use 100% slurry value. For solid columns, Consult factory.
2. All air cylinder values in Table include a Safety Factor of 1.5.
3. Gear, hydraulic or electric operators can be sized per customer specs as applicable - consult factory.
4. Consult Everlasting for higher differential pressures or for any clarifications.

EVERLASTING VALVE COMPANY, INC
108 SOMOGYI CT., S. PLAINFIELD N.J. 07080
TEL: 908-769-0700 FAX: 908-769-8697