CLASS 150 & 300 SD, DD, LD, LB SERIES

CL150 / CL300 — 8"

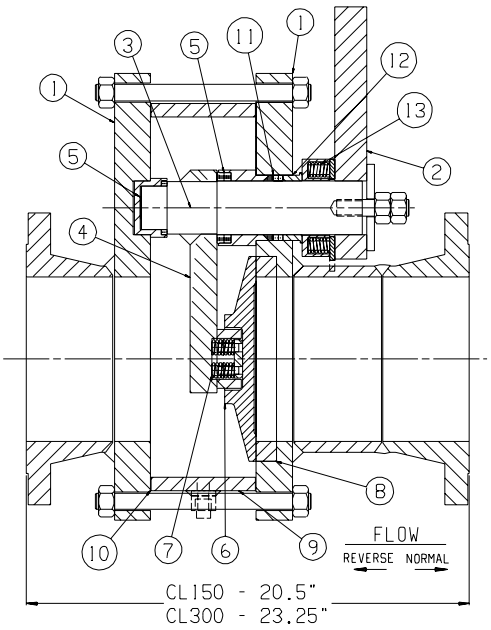

SINGLE DISC ("SD" SERIES)

SPECIFICATIONS

Rating:	CL150 & CL300 ANSI B16.34
Temp. Range:	-20 F to 750 F
Ends:	RF Flanged
Body:	Carbon Steel & 316 Stainless Steel
Seats:	Cast Stellite #6
Discs:	Stellite #6 Faced Carbon Steel
Configurations:	SD (Single Disc) shown at left DD (Double Disc) bottom left LD (Lens Disc) bottom center LB (Lock Bar) bottom right
Operators:	Handwheel; Air Cylinder
Accessories:	Limit Switches; Solenoid; Fail Safe (Air Reservior & Solenoid). Refer to Standard Accessory Sheets for accessory specifications.
Est. Cv :	2120

Notes:

1) All valves are supplied with (1) 3/4" Purge/Drain connection. (Shown in dotted lines on drawings)

NO.	NAME	DESCRIPTION (C.S. BODY)	DESCRIPTION (S.S. BODY)
1	Body Plates	Carbon Steel A516 Gr. 70	Stainless Steel A240 Gr. 316 w/ Stell. #6
2	Wrench	Carbon Steel	Carbon Steel
3	Post	17-4 PH Stainless Steel	17-4 PH Stainless Steel
4	Lever Arm	Carbon Steel A516 Gr. 70	Stainless Steel A240 Gr. 316
5	Bearings	Semi - Steel	Nitronic 60
6	Disc	Stellite #6 Faced Carbon Steel	Stellite #6 Faced Stainless Steel
7	Springs	17-7 PH Stainless Steel	17-7 PH Stainless Steel
8	Seat	Cast Stellite #6	Cast Stellite #6
9	Spacer Ring	Carbon Steel A516 Gr. 70	Stainless Steel A240 Gr. 316
10	Gaskets	Corrugated 304 Stainless Steel	Corrugated 304 Stainless Steel
11	Packing	See "Packing Options" Sheet	See "Packing Options" Sheet
12	Gland	Nitronic 60	Nitronic 60
13	Gland Springs	17-7 PH Stainless Steel	17-7 PH Stainless Steel
14	Lens Disc	Cast Stellite #6	Cast Stellite #6
15	Lock Bar	Stellite #6 Faced Carbon Steel	Stellite #6 Faced Stainless Steel

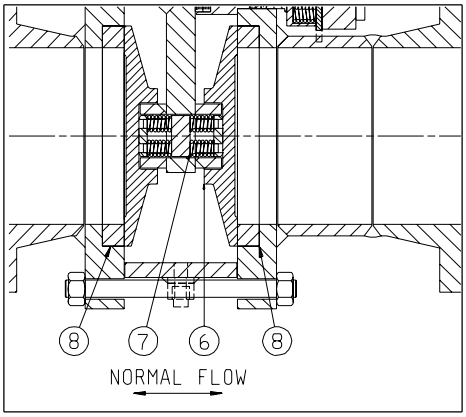

DOUBLE DISC ("DD" SERIES)

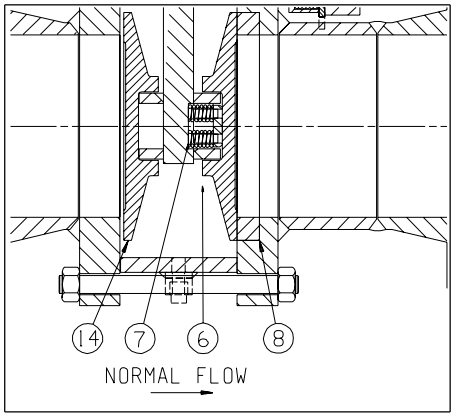

LENS DISC ("LD" SERIES)

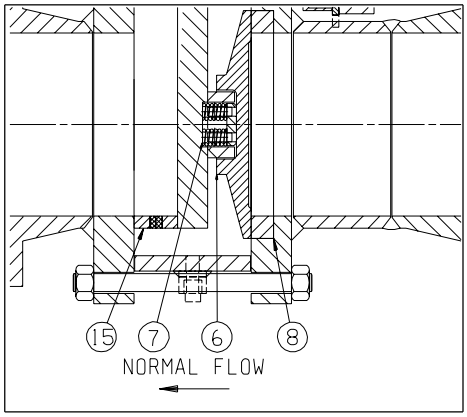

LOCK BAR ("LB" SERIES)

EVERLASTING VALVE COMPANY, INC
108 SOMOGYI CT., S. PLAINFIELD N.J. 07080
TEL: 908-769-0700 FAX: 908-769-8697
Member VMA

CL150 CL300 8"

CLASS 150 & 300 SD, DD, LD, LB SERIES

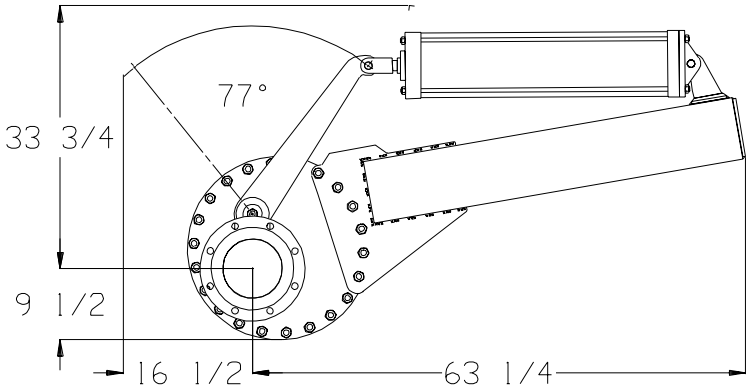

AIR CYLINDER OPERATOR

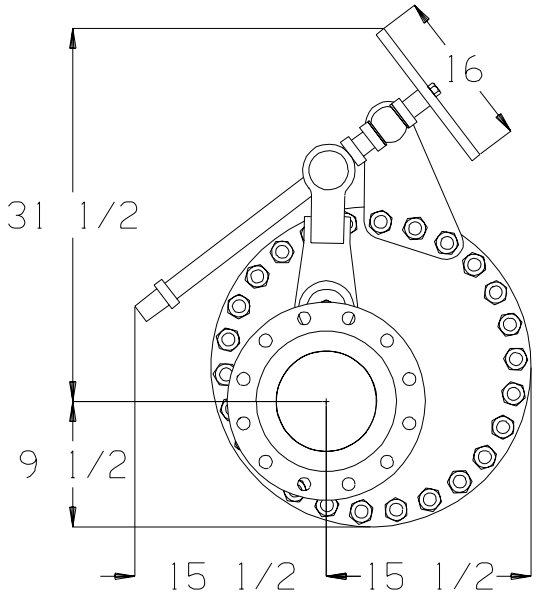

HANDWHEEL OPERATOR

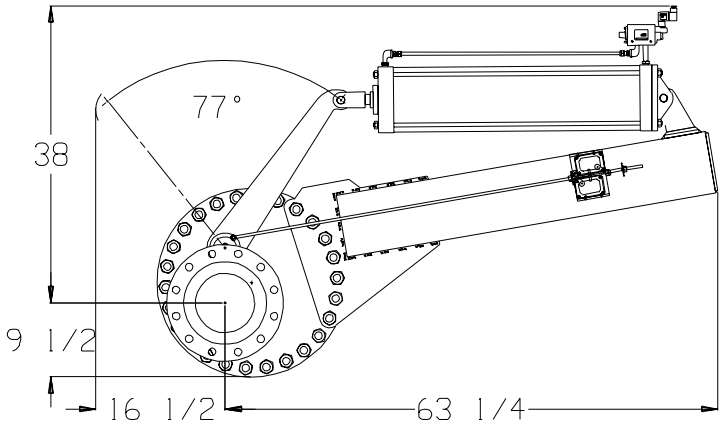

A/C WITH LIMIT SWITCHES & SOLENOID

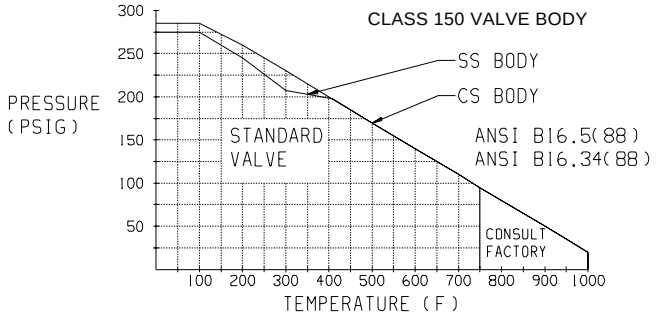

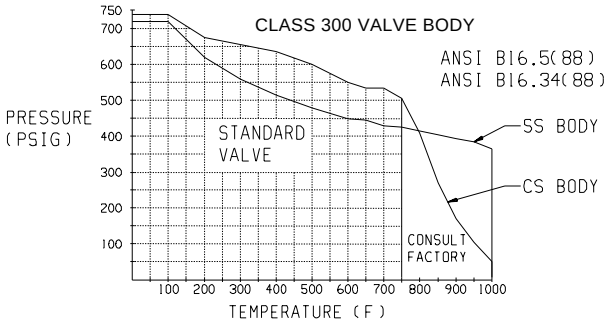

MAXIMUM DIFFERENTIAL PRESSURE DURING VALVE CYCLING FOR CL150 & CL300 (4)

FLUID	CYL @ 60 PSI AIR	CYL @ 80 PSI AIR	CYL @ 100 PSI AIR	HANDWHEEL
CLEAN FLUID	165	220	275	500
20% SLURRY(1)	115	170	225	355
50% SLURRY(1)	100	155	210	310
75% SLURRY(1)	85	140	195	260
100% SLURRY	65	120	175	200

NOTES:
1. For vertically positioned valves in slurry service, use 100% slurry value. For solid columns, Consult factory.
2. All air cylinder values in Table include a Safety Factor of 1.5.
3. Gear, hydraulic or electric operators can be sized per customer specs as applicable - consult factory.
4. Consult Everlasting for higher differential pressures or for any clarifications.

EVERLASTING VALVE COMPANY, INC
108 SOMOGYI CT., S. PLAINFIELD N.J. 07080
TEL: 908-769-0700 FAX: 908-769-8697